POSSIBLE IMBALANCE BETWEEN THE M_c AND $\overline{M}$ EFFECTS

Imbalance between these effects can easily remain due to the following reasons:

- The parameterization can only represent statistical effects of subgrid-scale processes balanced with the slowly-changing component of large-scale processes.

  - $M_c - \overline{M}$ *oscillates while propagating*

    Inertia-gravity waves tend to adjust $\overline{M}$ *to* M_c.

  - Dispersion error associated with vertical advection by the oscillating $M_c - \overline{M}$ produces a gross diffusive effect.

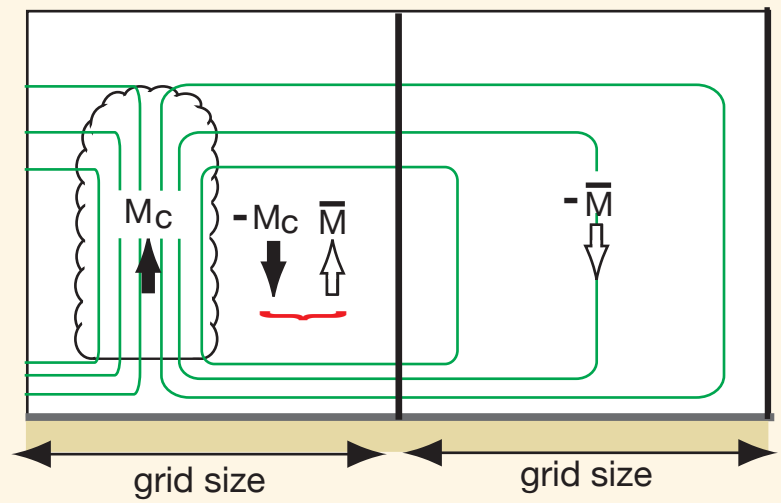

- Discretizations for vertical advection may be diffeent between the host model and the parameterization,